EXHAUST AIR DEVICE SAT and SET

SAT - for installation to the ductwork

SET - for installation in wall or ceiling

Suitable for all types of premises. Could handle large air flows with low sound level.
7 sizes from 100 to 400.
Easy to adjust, just plugg the nozzles.
Can also be manufactured of stainless steel.

Material and surface treatment

Manufactured from sheet steel. The front is as standard painted white RAL 9016. Other RAL colours are available at additional costs.

Order key

Exhaust air device SAT - 100
1 2

1 = type SAT or SET
2 = size 100 - 400

Quick guide

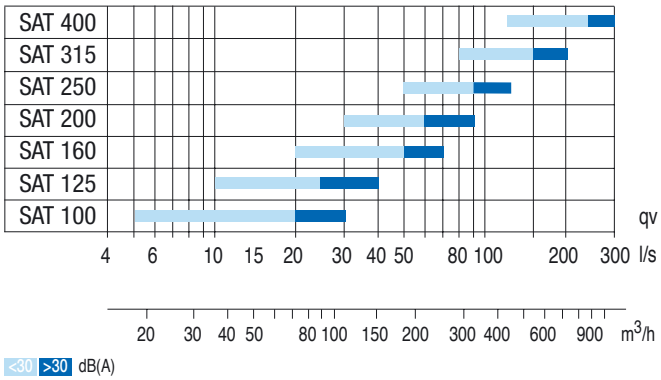

Performance

The graphs should not be used for commissioning.

Airflow - pressure drop - sound level

SAT / SET 100

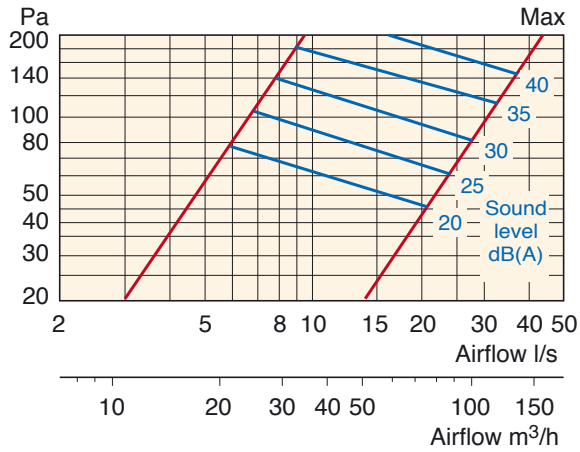

	Sound power level							
f, Hz	63	125	250	500	1 k	2 k	4 k	8 k
K_{okt}, dB	1	4	5	4	-3	-6	-12	-22
	Sound attenuation							
ΔL, dB	22	17	11	5	3	3	8	5

SAT / SET 125

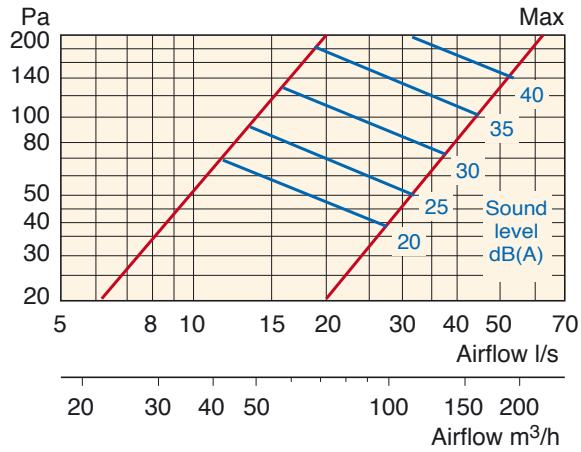

	Sound power level							
f, Hz	63	125	250	500	1 k	2 k	4 k	8 k
K_{okt}, dB	-8	-4	0	1	-1	-2	-10	-21
	Sound attenuation							
ΔL, dB	20	15	9	3	1	1	5	3

SAT / SET 160

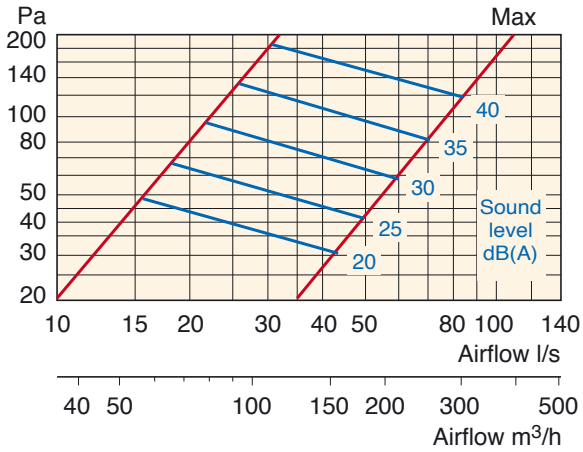

	Sound power level							
f, Hz	63	125	250	500	1 k	2 k	4 k	8 k
K_{okt}, dB	-1	1	4	3	-2	-3	-10	-22
	Sound attenuation							
ΔL, dB	18	13	7	3	2	3	3	3

SAT / SET 200

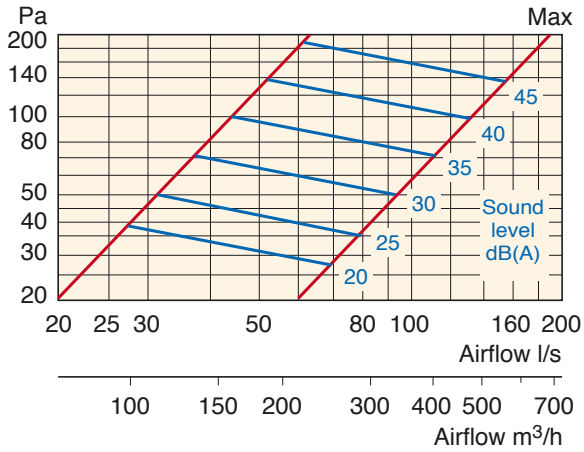

	Sound power level							
f, Hz	63	125	250	500	1 k	2 k	4 k	8 k
K_{okt}, dB	-3	0	3	2	-2	-3	-9	-20
	Sound attenuation							
ΔL, dB	16	11	5	3	2	3	3	3

Performance

The graphs should not be used for commissioning.

Airflow - pressure drop - sound level

SAT / SET 250

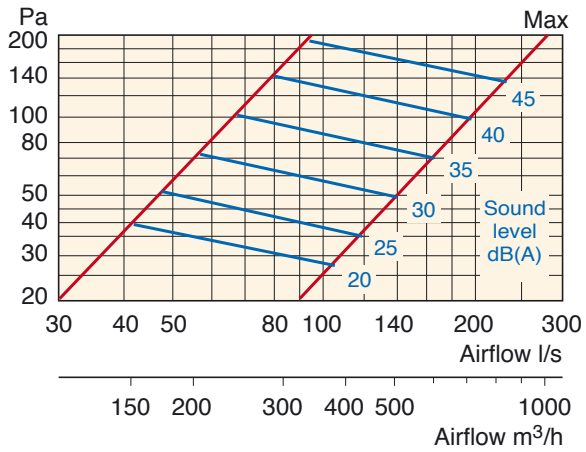

	Sound power level							
f, Hz	63	125	250	500	1 k	2 k	4 k	8 k
K_{okt}, dB	-3	0	3	2	-2	-3	-9	-20
	Sound attenuation							
ΔL, dB	16	11	5	3	2	3	3	3

SAT / SET 315

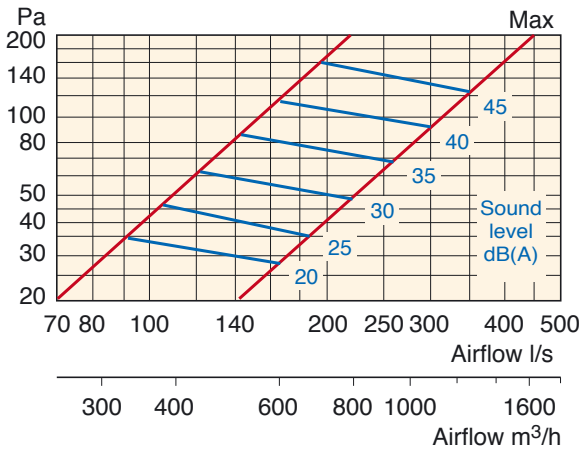

	Sound power level							
f, Hz	63	125	250	500	1 k	2 k	4 k	8 k
K_{okt}, dB	-1	0	1	0	0	-3	-10	-20
	Sound attenuation							
ΔL, dB	10	8	2	1	0	2	2	3

SAT / SET 400

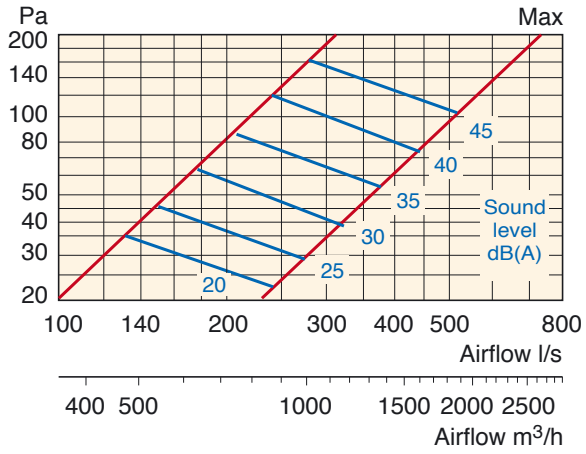

	Sound power level							
f, Hz	63	125	250	500	1 k	2 k	4 k	8 k
K_{okt}, dB	2	5	3	1	-1	-3	-9	-22
	Sound attenuation							
ΔL, dB	9	6	1	2	1	2	2	3

Commissioning

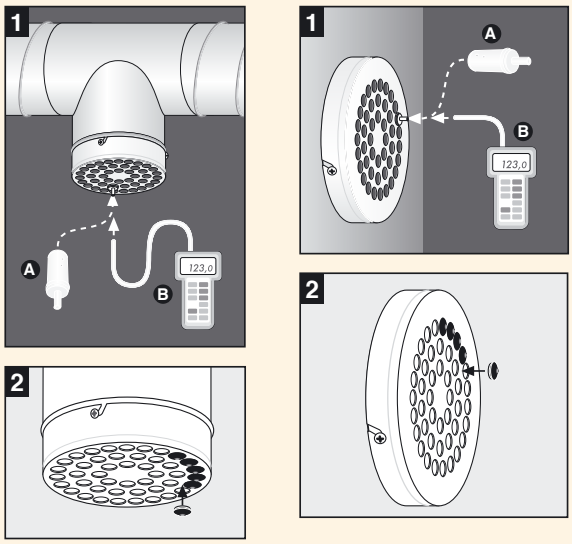

The k-factors are shown in the RCL "CONTROL GUIDE"

Dimensions and weight

Size	ø d	Ø A	Ø B	E	F	ø H	Weight, kg SAT	SET
100	99	105	130	50	25	110	0,2	0,3
125	124	130	165	50	25	135	0,2	0,4
160	159	165	205	50	25	175	0,3	0,6
200	199	205	255	50	25	215	0,5	0,8
250	249	255	320	60	40	270	0,8	1,3
315	314	320	405	60	40	335	1,1	1,7
400	399	405	520	70	40	420	1,8	2,8

Size	Number of nozzles
100	14
125	21
160	37
200	60
250	88
315	143
400	238

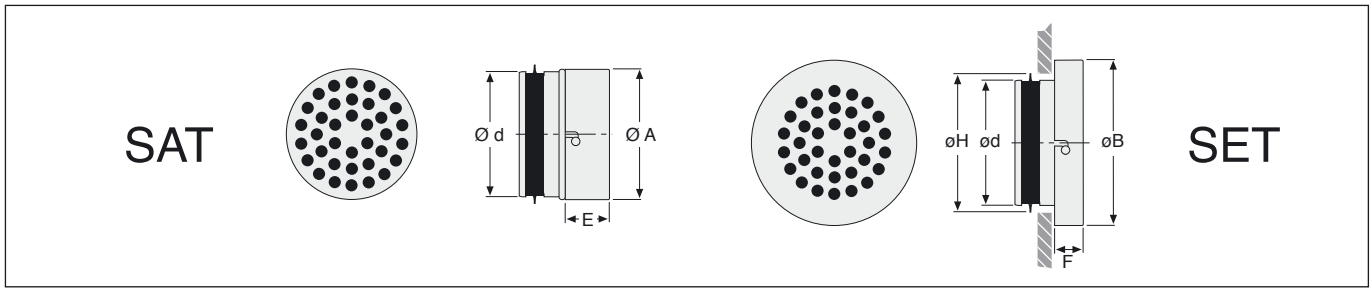

Installation

SAT

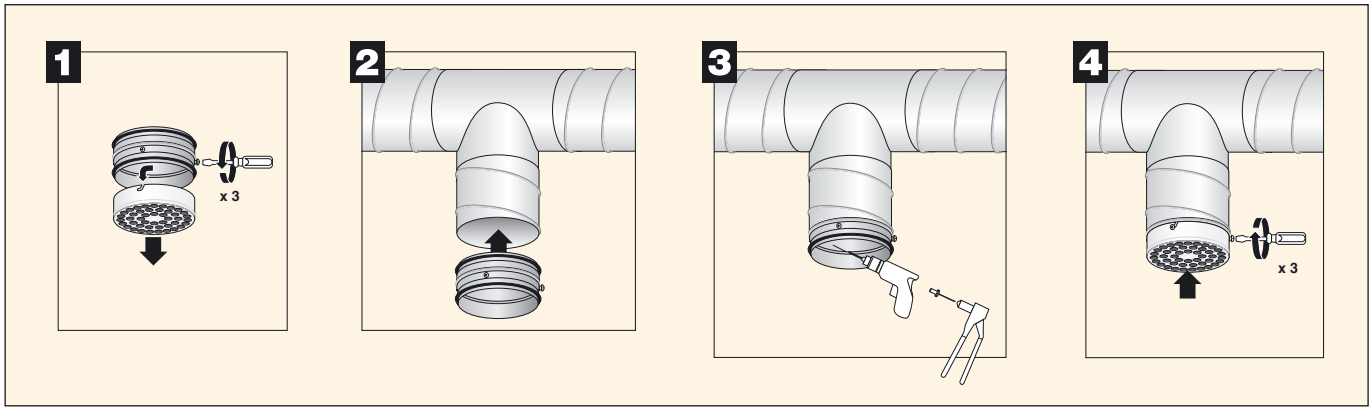
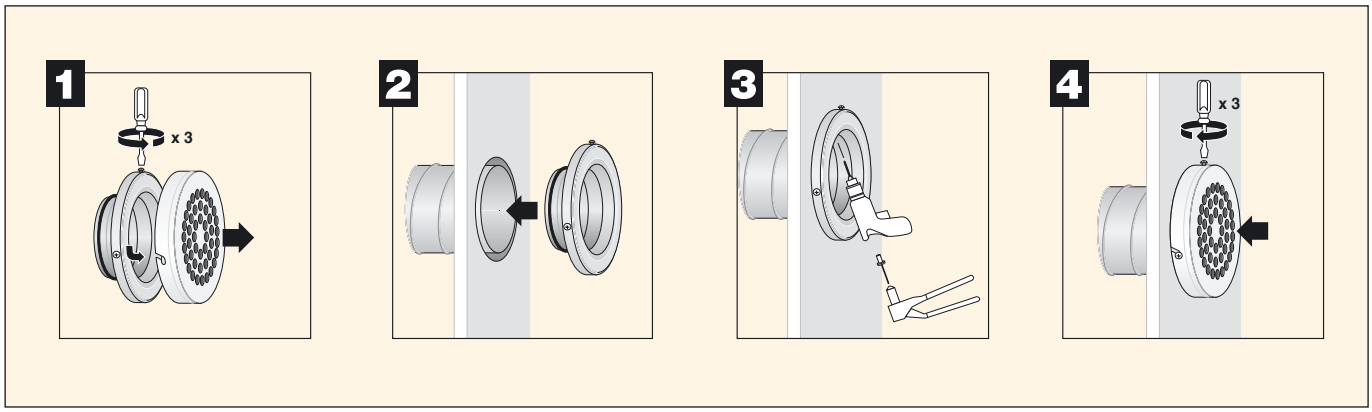
SET